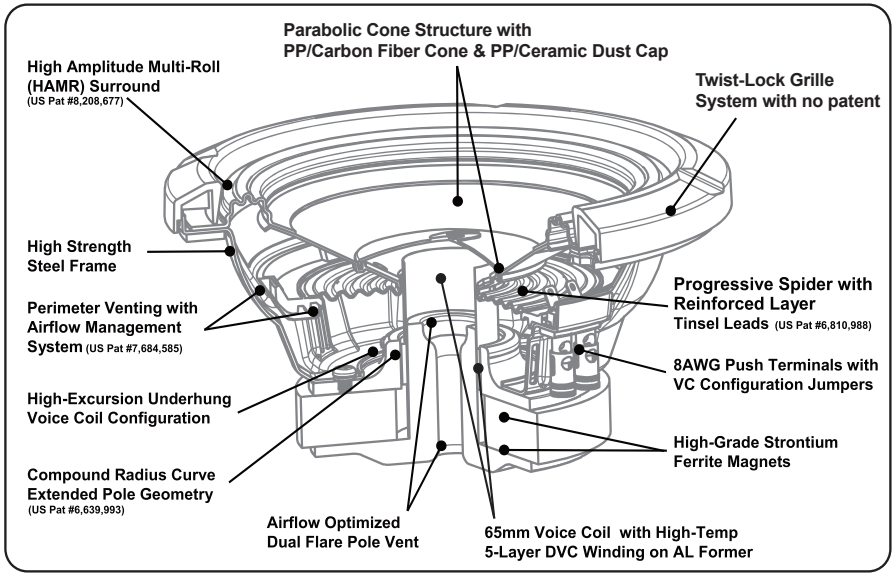

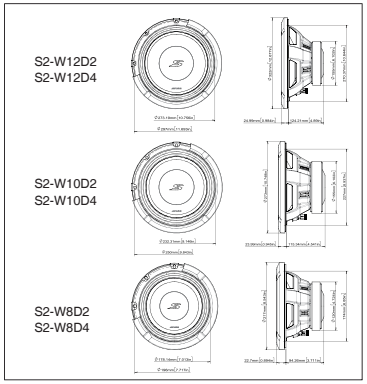

ALPINE®

ALPS ALPINE (Head Office)
1-7, Yukigaya-otsukamachi, Ota-ku
Tokyo, 145-8501
TEL. +81(3)3726-1211

ALPS ALPINE (Iwaki Office)
20-1 Yoshimiya Industrial Park, Iwaki
Fukushima Prefecture 970-1192
TEL. +81(246)36-4111

ALPS ALPINE NORTH AMERICA (Detroit Office)
1500 Atlantic Blvd
Auburn Hills, Michigan 48326
TEL. (248) 391-9950

ALPS ALPINE EUROPE GmbH (Head Office)
Ohmstrasse 4, D-85716
Unterschleissheim, Germany
TEL. +49(89)021421-0

ALPS ALPINE EUROPE GmbH (Sweden Office)
Grevgatan 37, 421 30
Vastra Frolunda, Sweden
TEL. +46(31)758-3300

ALPS ALPINE (China)
East 28F, Honest Plaza, No.7 Guanghua
Street, Chaoyang District
Beijing, 100004, P.R. of China
TEL. +86(10)6539-3690 (Alpsi)
+86(10)6568-0308 (Alpine Electronics)

ALPS ALPINE EUROPE GmbH (France Office)
Parc d'Activites Paris Nord II 184,
allée des érables BP 68125 Villepinte 95975
Roissy Charles de Gaulle Cedex, France
TEL. +33(1)48631-290

ALPS ALPINE EUROPE GmbH (Italy Office)
Viale C. Colombo 8, 20090
Trezzano sul Naviglio (MI), Italy
TEL. +39(02)90394-559

ALPS ALPINE EUROPE GmbH (UK Office)
Aurora House, Delta Avenue, Rockcley,
Milton Keynes, MK13 8LW, U.K.
TEL. +44(1908)354-210

ALPS ALPINE ASIA
The 9th Towers, Tower B, 24th Floor,
Unit TNB01-03, 33/4 Rama 9 road
Huay Kwang, Bangkok, 10310, Thailand
TEL. +66(2)080-9596

ALPINE ELECTRONICS OF AUSTRALIA
161-165 Princes Highway
Hallam Victoria, Australia 3803
TEL. +61(3)8787-1200

Printed in CHINA

ALPINE®

S2-SERIES SUBWOOFER
HAUT-PARLEUR D'EXTRÊMES GRAVES S-SERIES
APPLICATION GUIDE
GUIDE D' APPLICATION

S2-W12D4
12 Inch Dual Voice Coil Subwoofer (4Ω)+(4Ω)
Haut-parleur d'extrêmes graves à double bobine 12 po (4Ω)+(4Ω)

S2-W12D2
12 Inch Dual Voice Coil Subwoofer (2Ω)+(2Ω)
Haut-parleur d'extrêmes graves à double bobine 12 po (2Ω)+(2Ω)

S2-W10D4
10 Inch Dual Voice Coil Subwoofer (4Ω)+(4Ω)
Haut-parleur d'extrêmes graves à double bobine 10 po (4Ω)+(4Ω)

S2-W10D2
10 Inch Dual Voice Coil Subwoofer (2Ω)+(2Ω)
Haut-parleur d'extrêmes graves à double bobine 10 po (2Ω)+(2Ω)

S2-W8D4
8 Inch Dual Voice Coil Subwoofer (4Ω)+(4Ω)
Haut-parleur d'extrêmes graves à double bobine 8 po (4Ω)+(4Ω)

S2-W8D2
8 Inch Dual Voice Coil Subwoofer (2Ω)+(2Ω)
Haut-parleur d'extrêmes graves à double bobine 8 po (2Ω)+(2Ω)

General Specifications			S2-Series					
			S2-W8D2	S2-W8D4	S2-W10D2	S2-W10D4	S2-W12D2	S2-W12D4
			2Ω+2Ω	4Ω+4Ω	2Ω+2Ω	4Ω+4Ω	2Ω+2Ω	4Ω+4Ω
Sealed	Taille		8"		10"		12"	
Frequency Response	Response en Fréquence		35Hz-215Hz		25Hz-215Hz		23Hz-215Hz	
Power Range	Plage de Puissance		150W-300W RMS		250W-600W RMS			
Power Handling	Puisance Admissible		300W RMS (efficace) / 900W PEAK (de crête)		600W RMS (efficace) / 1800W PEAK (de crête)			
Magnet Weight	Poids de l'aimant		34 oz		64 oz			
Voice Coil Diameter	Diamètre de la bobine		35.55 mm (1.4")		65.5 mm (2.6")			
Thiele-Small Parameters								
Sensitivity (1W/1m)	Sensibilité (1W/1m)	SPL	82.6 dB	82.7 dB	84.5 dB	84.9 dB	85.7 dB	86.2 dB
DC Resistance	Résistance CC	Re	1.8Ω+1.8Ω	3.6Ω+3.6Ω	1.8Ω+1.8Ω	3.6Ω+3.6Ω	1.8Ω+1.8Ω	3.6Ω+3.6Ω
Inductance	Inductance	Le	2.62 mH	1.11 mH	3.85 mH	1.59 mH	3.79 mH	1.55 mH
Free Air Resonance	Résonance à l'air libre	Fs	46.5 Hz	47.9 Hz	31.1 Hz	32.0 Hz	26.6 Hz	28.8 Hz
Equivalent Stiffness	Raiduer équivalente	Vas	7.2 L	7.5 L	24.5 L	24.9 L	55.1 L	51.5 L
Mechanical Q	Q Méchanique	Qms	5.6	5.9	6.4	5.6	6.5	5.9
Electrical Q	Q Électrique	Qes	0.65	0.74	0.43	0.44	0.46	0.47
Total Q	Q Total	Qts	0.59	0.64	0.41	0.41	0.43	0.44
Cone Area	Surface du diaphragme	Sd	194 cm²		330 cm²		472 cm²	
Linear Excursion	Displacement Linéare	Xmax (1-way)	10 mm		15 mm			
Mechanical Travel	Déplacement Mécanique	Xmech (P-P)	40 mm		64 mm			

Note: Specifications subject to change without notice

APPLICATION DIAGRAMS

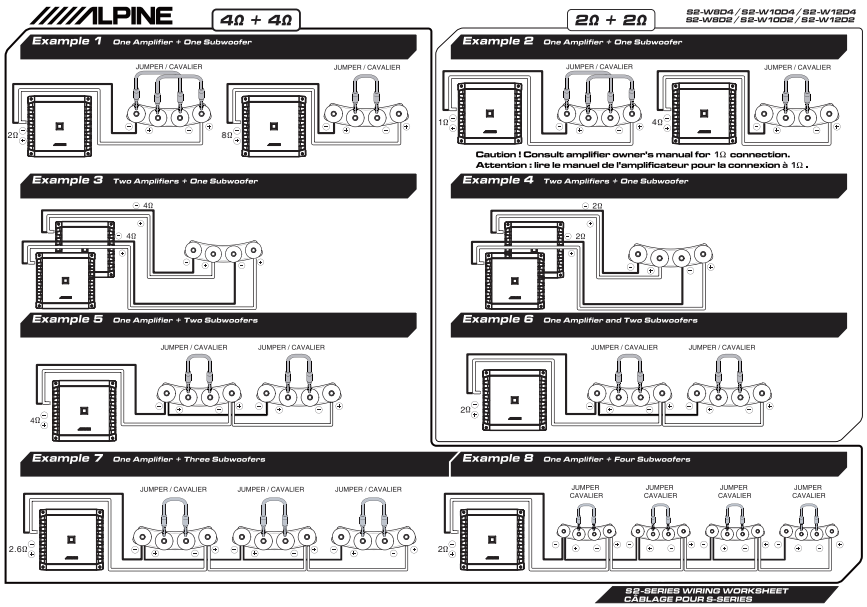

		S2-W8D2/D4	S2-W10D2/D4	S2-W12D2/D4
Sealed Box Range	Net Internal Volume	0.15-0.50 ft³	0.4-0.85 ft³	0.55-1.0 ft³
Recommended Sealed Box	External Box Dimensions	13"x13"x5.5"	12"x12"x10.5"	14"x14"x11"
	Gross Internal Volume	0.30 ft³	0.58 ft³	0.85 ft³
	Net Internal Volume	0.27 ft³	0.53 ft³	0.79 ft³
	F3, Qtc	D2: 61 Hz, 0.72 D4: 57 Hz, 0.78	D2: 47 Hz, 0.73 D4: 48 Hz, 0.77	D2: 41 Hz, 0.88 D4: 42 Hz, 0.91
Vantad Box Range	Net Internal Volume	0.35-0.70 ft³	0.75-1.3 ft³	1.0-1.5 ft³
	Tuning	36-40Hz	35-39Hz	32-37Hz
Recommended Vented Box	External Box Dimensions	11"x8.5"x20"	23"x12"x11.5"	23"x12.5"x14"
	Gross Internal Volume	0.71 ft³	1.3 ft³	1.71 ft³
	Vent Area (dimensions)	5.25in² (7"x 0.75")	10in² (10"x 1")	12.5in² (12.5"x 1")
	Vent length	15.5"	17"	16"
	Vent Displacement	0.10 ft³	0.17 ft³	0.20 ft³
	Net Internal Volume (Vb)	0.58 ft³	1.08 ft³	1.45 ft³
	F3, ripple, Fb	D2: 31Hz, 1.1dB, 37Hz D4: 31Hz, 1.6dB, 37Hz	D2: 29Hz, 2.9dB, 35Hz D4: 29Hz, 2.3dB, 35Hz	D2: 30Hz, 3.3dB, 34Hz D4: 30Hz, 4.1dB, 34Hz

Notes:
1) Recommended enclosure net Internal volume is based upon 3/4" (19mm) MDF enclosure construction.
2) Consult the table below for alternative enclosure net internal volume calculation.

Front Mount Déplacement* (magnet in)	-0.03ft³	-0.05ft³	-0.06ft³
Reverse Mount Added Volume* (magnet out)	+0.03ft³	+0.05ft³	+0.07ft³

***Based upon 3/4" (19mm) baffle thickness, with opening cut approximately to gasket inner diameter**

		S2-W8D2/D4	S2-W10D2/D4	S2-W12D2/D4
Gamme Box Sealed	Net volume interne	0.15-0.50 pi³	0.4-0.85 pi³	0.55-1.0 pi³
Recommended Boîte Scellé	Dimensions extérieures	13 po x13 po x5.5 po	12 po x12 po x10.5 po	14 po x14 po x11 po
	Volume intérieur brut	0.30 pi³	0.58 pi³	0.85 pi³
	Volume intérieur Net ***	0.27 pi³	0.53 pi³	0.79 pi³
	F3,Qtc	D2: 61 Hz, 0.72 D4: 57 Hz, 0.78	D2: 47 Hz, 0.73 D4: 48 Hz, 0.77	D2: 41 Hz, 0.88 D4: 42 Hz, 0.91
Gamme charge bass-reflex	Volume net interne	0.35-0.70 pi³	0.75-1.3 pi³	1.0-1.5 pi³
	mise au point	36-40Hz	35-39Hz	32-37Hz
Recommended charge bass-reflex	Dimensions extérieures	11 po x8.5 po x20po	23 po x12 po x11.5 po	23 po x12.5 po x14 po
	Volume intérieur brut	0.71 pi³	1.3 pi³	1.71 pi³
	Aire de l'évent (dimensions)	5.25in² (7 po x 0.75 po)	10in² (10 po x 1 po)	12.5in² (12.5 po x 1po)
	Longueur de l'évent	15.5 po	17 po	16 po
	déplacement de l'évent	0.10 pi³	0.17 pi³	0.20 pi³
	Volume intérieur Net (Vb)***	0.58 pi³	1.08 pi³	1.45 pi³
	F3, crête, Fb	D2: 31Hz, 1.1dB, 37Hz D4: 31Hz, 1.6dB, 37Hz	D2: 29Hz, 2.9dB, 35Hz D4: 29Hz, 2.3dB, 35Hz	D2: 30Hz, 3.3dB, 34Hz D4: 30Hz, 4.1dB, 34Hz

Notes:
1) Recommandé enceinte volume net interne est basée sur 3/4 "(19mm) de construction boîtier en MDF.
2) Consulter le tableau ci-dessous pour le calcul de filet d'encles alternative volume interne.

Avant le déplacement du Mont * (aimant)	-0.03ft³	-0.05ft³	-0.06ft³
Inverser Volume mont Ajouté * (des aimants)	+0.03ft³	+0.05ft³	+0.07ft³

*** Sur la base de l'épaisseur du déflecteur 3/4" (19mm), avec une ouverture coupée à peu près à joint diamètre intérieur**